REV.	DATE	DESCRIPTION
NC	04/05/03	INITIAL RELEASE
A	08/04/05	UPDATE DRAWING – REPLACING 112477–10

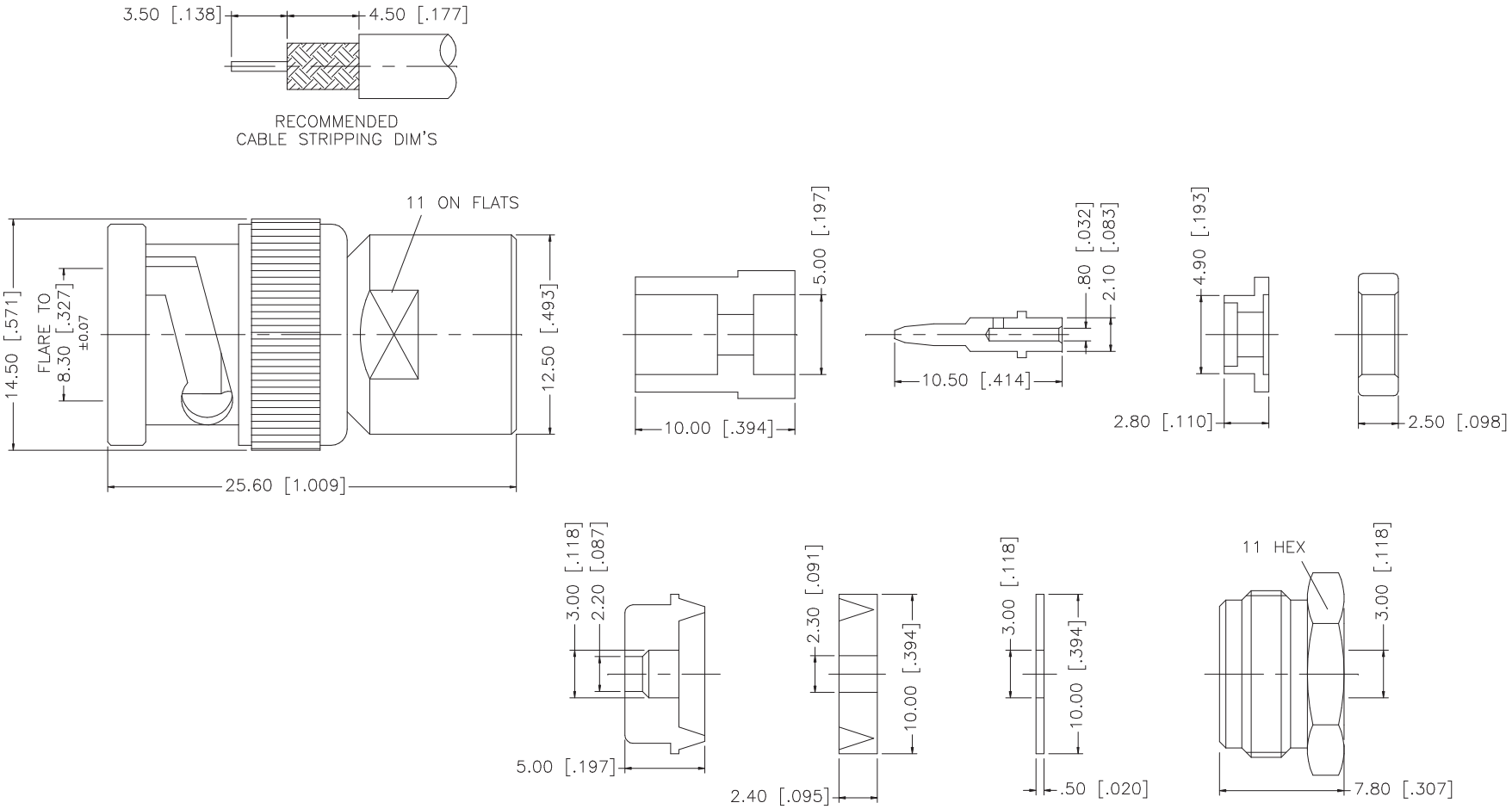

NOTE: CONTACT PIN TO SOLDER

	DESCRIPTION	MATERIAL	FINISH	QTY
8				
7	HEX NUT	BRASS	NICKEL	1
6	WASHER	BRASS	NICKEL	1
5	GASKET	SILICONE	RED	1
4	RING	BRASS	NICKEL	1
3	CONTACT PIN	BRASS	GOLD	1
2	INSULATOR	TEFLON	NATURAL	1
1	SHELL/BODY	BRASS	NICKEL	1

UNLESS OTHERWISE SPECIFIED DIMENSIONS ARE IN MILLIMETERS. DIMENSIONS IN [ ] ARE IN INCHES AND FOR CUSTOMER REFERANCE ONLY.

UNLESS OTHERWISE SPECIFIED TOLERANCES FOR MILLIMETERS ARE:
0.5 – 8mm ± 0.20mm
8 – 30mm ± 0.40mm
30 – 120mm ± 0.50mm

UNLESS OTHERWISE SPECIFIED TOLERANCES FOR INCHES ARE:
.020 – .315 = ± 0.007"
.315 – 1.180 = ± 0.015"
1.180 – 4.724 = ± 0.020"

DO NOT SCALE DRAWING

APPROVALS		DATE
DRAWN	G.R.S.	08/04/05
CHECKED		
ISSUED		
SHEET	1 OF 1	
CAD FILE	C:/112/112477.DWG	

Amphenol Connex

PART DESCRIPTION
BNC CLAMP PLUG
(FOR RG–174/U, 188A/U, 316/U)

PART NO. 112477

DWG. NO. 112477.DWG | REV. A | SIZE A | SCALE NA