REV.	DATE	DESCRIPTION
NC	08/18/98	INITIAL RELEASE
A	09/06/06	REVISE FERRULE I.D. – UPDATE DRAWING FORMAT

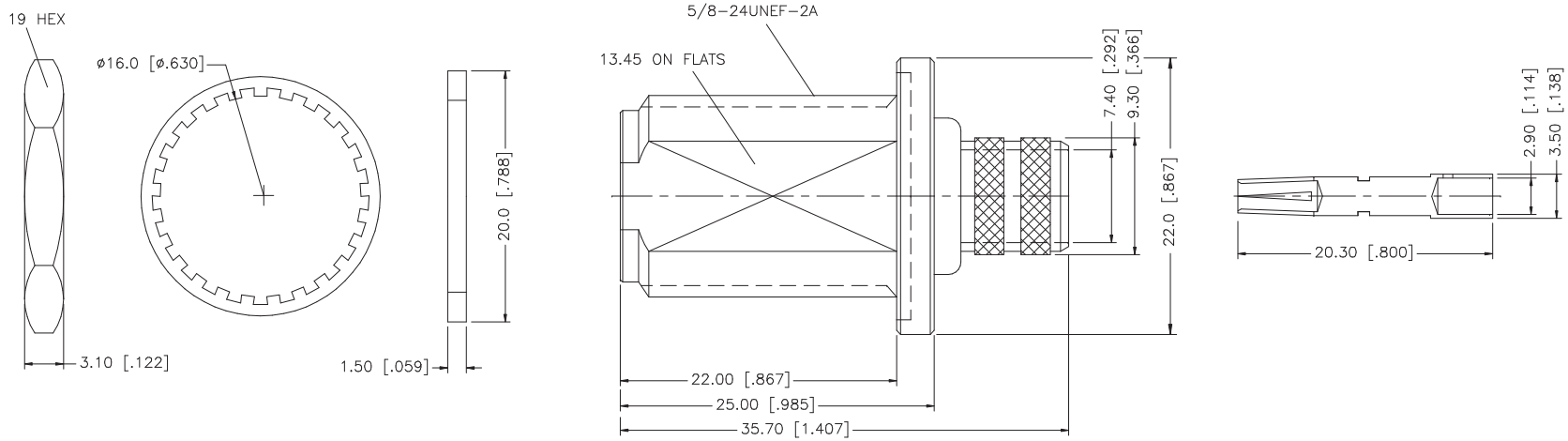

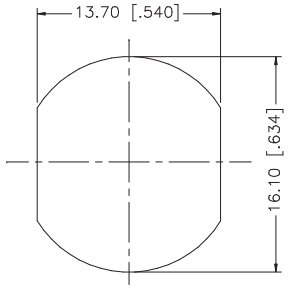

RECOMMENDED MOUNTING HOLE DIMENSIONS

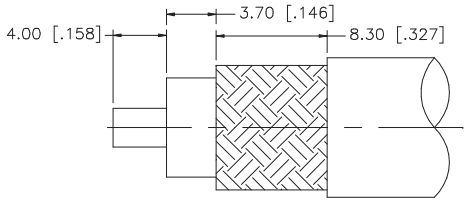

RECOMMENDED CABLE STRIPPING DIM'S

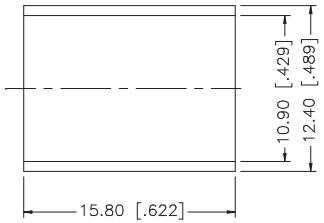

NOTE:

1. CRIMPED FERRULE HEX CRIMP SIZE .429"
2. CRIMPED CONTACT PIN HEX CRIMP SIZE .110"

	DESCRIPTION	MATERIAL	FINISH	QTY
8				
7	FERRULE	COPPER	NICKEL	1
6	HEX NUT	BRASS	NICKEL	1
5	LOCK WASHER	BRASS	NICKEL	1
4	GASKET	SILICONE	RED	1
3	CONTACT PIN	PHOS. BRONZE	GOLD	1
2	INSULATOR	TEFLON	NATURAL	1
1	BODY	BRASS	NICKEL	1

UNLESS OTHERWISE SPECIFIED DIMENSIONS ARE IN MILLIMETERS. DIMENSIONS IN [ ] ARE IN INCHES AND FOR CUSTOMER REFERANCE ONLY.

UNLESS OTHERWISE SPECIFIED TOLERANCES FOR MILLIMETERS ARE:
0.5 – 8mm ± 0.20mm
8 – 30mm ± 0.40mm
30 – 120mm ± 0.50mm

UNLESS OTHERWISE SPECIFIED TOLERANCES FOR INCHES ARE:
.020 – .315 = ± 0.007"
.315 – 1.180 = ± 0.015"
1.180 – 4.724 = ± 0.020"

DO NOT SCALE DRAWING

APPROVALS		DATE
DRAWN	G.R.S.	09/06/06
CHECKED		
ISSUED		
SHEET	1 OF 1	
CAD FILE	C:/172/172220.DWG	

Amphenol Connex

PART DESCRIPTION: N BULKHEAD CRIMP JACK – LMR 400 (FOR BELDEN 8214, 9913, 9914)

PART NO. 172220

DWG. NO.	REV.	SIZE	SCALE
172220.DWG	A	A	NA