REV.	DATE	DESCRIPTION
A	01/07/99	ADD CRIMP NOTES/ CHANGE FERRULE DIMS
B	05/08/07	REVISE BARREL, FERRULE DIMENSIONS, ADD CRIMP NOTES

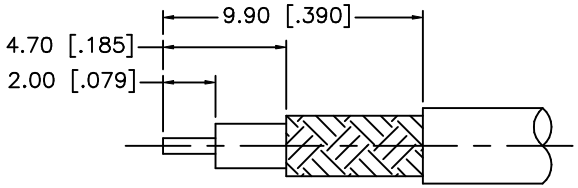

RECOMMENDED
CABLE STRIPPING DIM'S

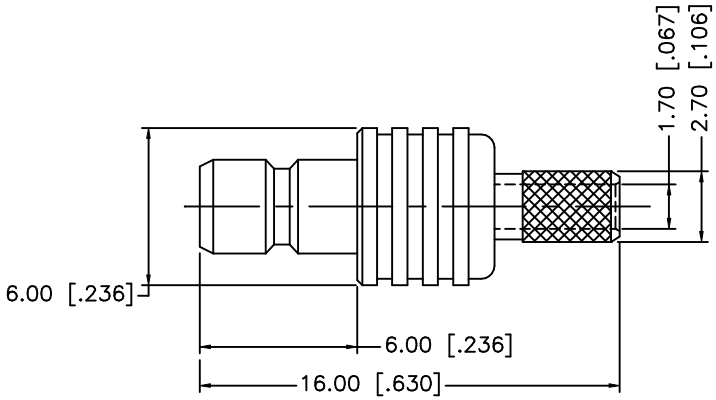

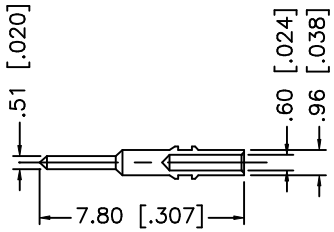

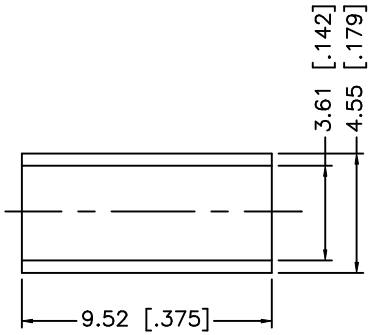

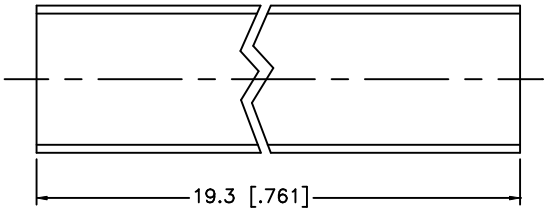

NOTE:
1. CRIMPED FERRULE HEX CRIMP SIZE .151"
2. CRIMPED CONTACT PIN SQ. CRIMP SIZE 0.7mm

	DESCRIPTION	MATERIAL	FINISH	QTY
8				
7				
6				
5	HEAT SHRINK TUBE			1
4	FERRULE	COPPER	NICKEL	1
3	CONTACT PIN	BRASS	GOLD	1
2	INSULATOR	TEFLON	NATURAL	1
1	BODY	BRASS	NICKEL	1

UNLESS OTHERWISE SPECIFIED DIMENSIONS ARE IN MILLIMETERS. DIMENSIONS IN [ ] ARE IN INCHES AND FOR CUSTOMER REFERANCE ONLY.

UNLESS OTHERWISE SPECIFIED TOLERANCES FOR MILLIMETERS ARE:
0.5 – 8mm ± 0.20mm
8 – 30mm ± 0.40mm
30 – 120mm ± 0.50mm

UNLESS OTHERWISE SPECIFIED TOLERANCES FOR INCHES ARE:
.020 – .315 = ± 0.007"
.315 – 1.180 = ± 0.015"
1.180 – 4.724 = ± 0.020"

DO NOT SCALE DRAWING

APPROVALS		DATE
DRAWN	G.R.S.	05/08/07
CHECKED		
ISSUED		
SHEET	1 OF 1	
CAD FILE	C:/142/142182.DWG	

Amphenol Connex

PART DESCRIPTION: SMB CRIMP JACK (FOR RG-316U/D CABLE)

PART NO. 142182

DWG. NO. 142182.DWG | REV. B | SIZE A | SCALE NA