DATE REVISED: 12/1/09 TEF

CATALOG NUMBER
1890-007-1

MATERIAL AND FINISH

HOUSING, SHELL, CONTACT AND CABLE ADAPTER:	BeCu; GOLD PLATE 75 MICROINCHES TYPICAL OVER NICKEL PLATE 100 MICROINCHES TYPICAL
DIELECTRICS AND RETAINING SLEEVE:	VIRGIN PTFE
FERRULE	BRASS; GOLD PLATE 75 MICROINCHES TYPICAL OVER NICKEL PLATE 100 MICROINCHES TYPICAL
SPRING:	17-7 STAINLESS STEEL

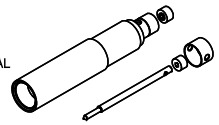

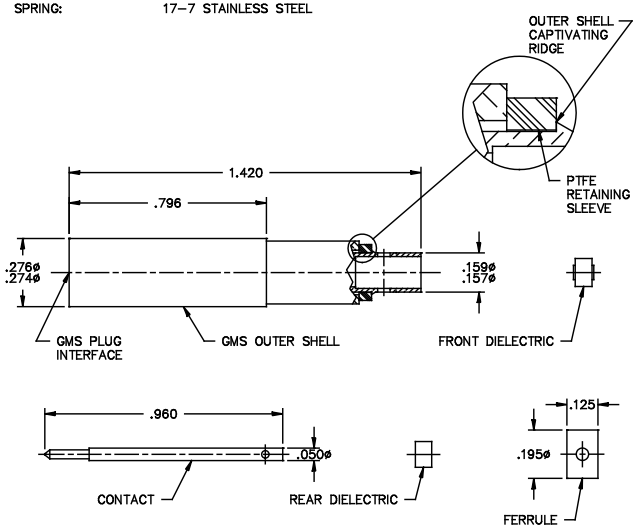

This drawing and any data contained herein is the property of Corning Gilbert Inc., and constitutes and contains proprietary and confidential information. Neither receipt nor possession of this drawing confers or transfers any right to duplicate, use or disclose any information contained herein except as expressly authorized by Corning Gilbert Inc.

GMS SIZE 5 PLUG FOR MIL-C-38999 SHELL - 160 CABLE TIMES MICROWAVE	IDENT CODE: 82316 REVISION: J	Corning Gilbert Inc.

SOURCE FILE:	SK-1059	DWG. NO.:	OL-1890-007-1	ASSY. PROC.:	AP18-015