20-925-0000-00

NOTES:

**Materials:** SST. corrosion-resistant, Non Magnetic 303, per ASTM A484 and A582. Beryllium Copper per ASTM-B-196, QQ-C-530
PTFE Fluorocarbon per ASTM-D-1710 Type 1

**Finish:** Center Conductors and solder components shall be plated per MIL-G-45204 Type II, Class 1 over Nickel plate per QQ-N-290.
Body and Body components shall be passivated per ASTM A380.

**Frequency:** DC-27 GHz

**VSWR:** 1.2 TO 27 GHz

**Insertion Loss:** $.05\sqrt{\text{Frequency}}$

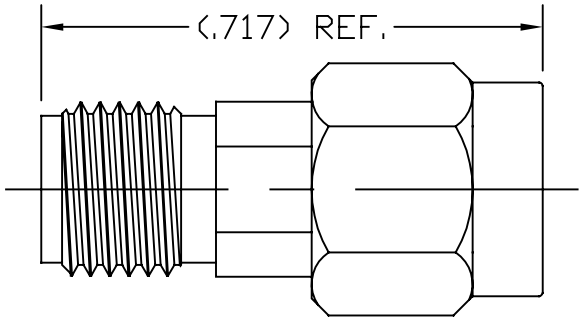


| LTR | DESCRIPTION | DATE | APPR. |
|---|---|---|---|
| — | REL | 07/03 | |
| | | | |
| | | | |
| | | | |
| | | | |
| | | | |
| | | | |
| | | | |

DRAWN LMW | CHECKED
APPR. | SCALE

UNLESS OTHERWISE SPECIFIED:
1. REMOVE ALL BURRS
2. BREAK ALL CORNERS & EDGES .005 R. MAX
3. CHAMFER 1st & LAST THREADS 45°
4. SURFACE FINISHED 32√ UNLESS OTHERWISE SPECIFIED.
5. DIAMETERS ON COMMON CENTERS TO BE CONCENTRIC WITHIN .002 T.I.R.
6. ALL DIMENSIONS ARE AFTER PLATING.

DIMENSIONS ARE IN INCHES
TOLERANCES

| DECIMALS | | FRACTIONAL | ANGULAR | |
|---|---|---|---|---|
| .X | ±.030 | ± 1/64 | .X° | ±1°0′ |
| .XX | ±.010 | | .X°X′ | ±15′ |
| .XXX | +.005 | | | |

USED ON: 20-925-0000-00

MATERIAL

FINISH

SRI CONNECTOR GAGE CO.
751 NORTH DRIVE
MELBOURNE FL. 32934

TITLE: SMA PLUG TO 2.9mm JACK

| SIZE | FSCM NO. | SHEET | DWG. NO. |
|---|---|---|---|
| A | OHMO1 | 1 | 20-925-0000-00 |