23-130-1500-90

NOTES:

Materials: SST. corrosion-resistant, Non Magnetic 303, per ASTM A484 and A582. Beryllium Copper per ASTM-B-196, QQ-C-530 Oxide-Noryl (tm), MIL-P-46129 Dielectric Constant = 2.7.

Finish: Center Conductors and solder components shall be plated per MIL-G-45204 Type II, Class 1 over Nickel plate per QQ-N-290. Body and Body components shall be passivated per ASTM A380.

Frequency: DC-34.5 GHz

VSWR: 1.05 + .005 x Frequency

Insertion Loss: .05 SQRT(F(GHz))dB

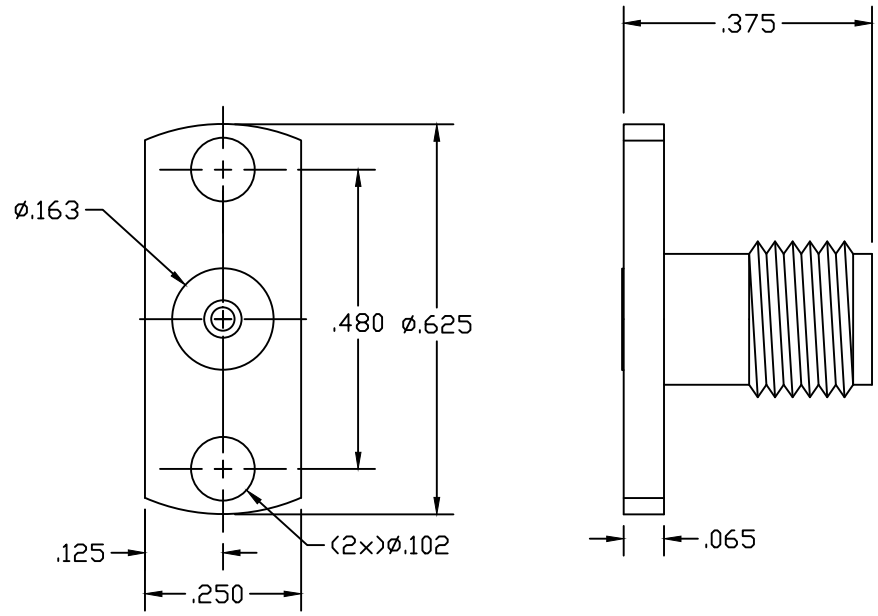

LTR	DESCRIPTION	DATE	APPR.
—	REL	10/06	

DRAWN SM | CHECKED | APPR. | SCALE

UNLESS OTHERWISE SPECIFIED:
1. REMOVE ALL BURRS
2. BREAK ALL CORNERS & EDGES .005 R. MAX
3. CHAMFER 1st & LAST THREADS 45°
4. SURFACE FINISHED 32√ UNLESS OTHERWISE SPECIFIED.
5. DIAMETERS ON COMMON CENTERS TO BE CONCENTRIC WITHIN .002 T.I.R.
6. ALL DIMENSIONS ARE AFTER PLATING.

DIMENSIONS ARE IN INCHES
TOLERANCES

DECIMALS		FRACTIONAL	ANGULAR	
.X	±.030	± 1/64	.X°	±1°0′
.XX	±.010		.X°X′	±15′
.XXX	+.005			

USED ON: 23-130-1500-90

MATERIAL

FINISH

SIZE: A | FSCM NO.: OHM01 | SHEET: 1 | DWG. NO.: 23-130-1500-90

SRI CONNECTOR GAGE CO.
751 NORTH DRIVE
MELBOURNE FL. 32934

TITLE: 3.5MM JACK RECEPTACLE 2 HOLE FLANGE MOUNT