1.0 PERFORMANCE
1.1 FREQUENCY RANGE: DC–4GHz
1.2 VOLTAGE RATING: 500V RMS (sea level)
1.3 NOMINAL IMPEDANCE: 50 OHMS
1.4 DWV: 1500 V RMS @ 60 Hz (sea level)
1.5 TEMPERATURE RANGE: –65°C TO +165°C
1.6 WEATHERIZED: IP–65, MATED CONDITION
2.0 MATERIALS
2.1 DIELECTRIC: TEFLON, ASTM–D–1710
2.2 CENTER CONTACT: BeCu, ASTM–B–196
2.3 LOCKWASHER: PHOSPHOR BRONZE, ASTM–B–139
2.4 ALL OTHER METAL PARTS: BRASS, ASTM–B–16
2.5 GASKET: SILICON RUBBER, ZZ–R 765, GR. 50 (RED)
3.0 FINISHES: SEE TABLE
4.0 MECHANICAL
4.1 INTERFACE IN ACCORDANCE WITH MIL–STD–348

DWG NO. OL–657–1 REV. D

PLATING VARIATIONS

| PART NUMBER | BODY | CONTACT |
|---|---|---|
| UG–657/U | NICKEL | SILVER |
| UG–657/U NI/GOLD | NICKEL | GOLD |
| UG–657A/U | NICKEL | SILVER |
| UG–657A/U NI/GOLD | NICKEL | GOLD |

DO NOT SCALE DRAWING

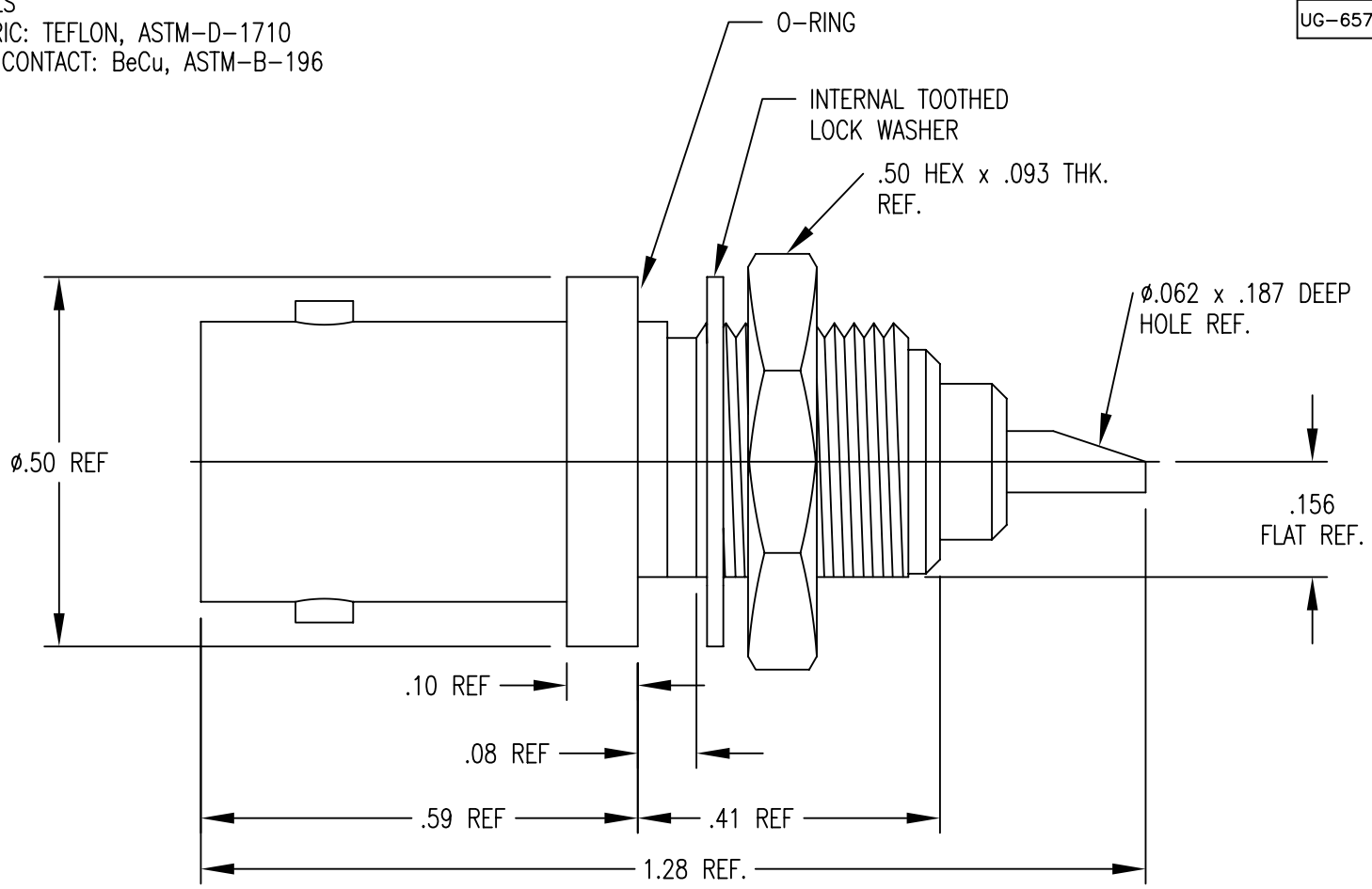


| Rev. | Revisions | Disp. | Date | Dwn. | Appd. |
|---|---|---|---|---|---|
| D | ADD IP–65 SPECIFICATION | MIX | 6/4/09 | FSH | FSH |
| C | REMOVE HERMETIZED FROM TITLE BLOCK | MIX | 6/3/09 | FSH | FSH |
| B | ORIGINAL | MIX | 5/12/08 | | |

Ref.: REMOVE ALL BURRS AND SHARP EDGES .005 MAX. INTERPRET PER ASME Y14.5M–1994

THIS DRAWING CONTAINS CONFIDENTIAL INFORMATION PROPRIETARY TO SAN–TRON INC. IT MUST NOT BE REPRODUCED OR DISCLOSED TO OTHERS OR USED IN ANY OTHER WAY, IN WHOLE OR PART EXCEPT AS AUTHORIZED IN WRITING BY SAN–TRON INCORPORATED.

UNLESS OTHERWISE SPECIFIED:
ALL DIMENSIONS ARE IN INCHES.
ALL DIMENSIONS ARE AFTER PLATING.
.XXX= ±.005 ALL MACHINED SURFACES 63 MAX.
.XX= ±.01 ANG.±1/2° FRACTIONAL= ±1/64
◎ .004 MAX. TIR. ⊥ AXIS .001

THIRD ANGLE PROJECTION

| | | |
|---|---|---|
| DWN | DT | 06/25/04 |
| CHKD | SJS | X |
| APPR | FSH | 5/12/08 |

SAN-TRON, INC.
4 NEWBURYPORT TPK. IPSWICH MA USA 01938
TEL: 978 - 356 -1585 FAX: 978 - 356 -1573
WWW. santron.com E MAIL: santron@santron.com

TITLE BNC BULKHEAD RECEPTACLE PANEL SEALED, STRAIGHT, FEMALE

MATERIAL: SEE NOTE 2.0
FINISH: SEE NOTE 3.0
CAGE CODE: 50896
SCALE X:X
DWG NO. OL–657–1 REV. D