DATE REVISED: 8/3/06

CATALOG NUMBER
H118-D32-04

MATERIAL AND FINISH

FLANGE AND PLUG HOUSING:	CRES 303; PASSIVATED
CENTER CONTACT AND REAR HOUSING:	BeCu; GOLD PLATE 50-100 MICROINCHES OVER NICKEL PLATE 50 MICROINCHES MIN.
DIELECTRICS:	VIRGIN PTFE
SPRING:	17-7 PH STAINLESS STEEL

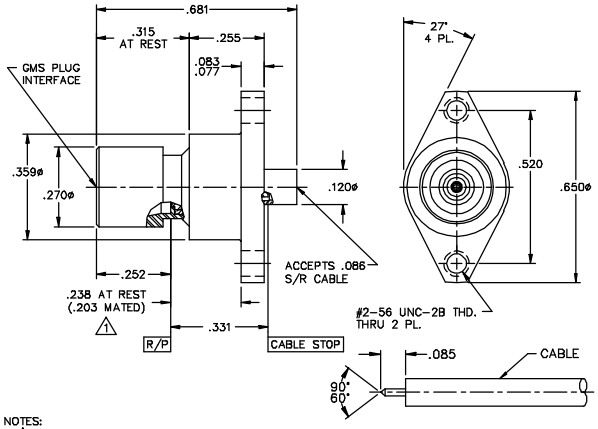

NOTES:

1. THE .203 RECOMMENDED MATED DIMENSION ALLOWS .035 AXIAL FLOAT IN BOTH DIRECTIONS.
2. RADIAL FLOAT: .020 MIN.
   AXIAL FLOAT: .070 MIN.

This drawing and any data contained herein is the property of Corning Gilbert Inc., and constitutes and contains proprietary and confidential information. Neither receipt nor possession of this drawing confers or transfers any right to duplicate, use or disclose any information contained herein except as expressly authorized by Corning Gilbert Inc.

GMS PLUG FLOAT MOUNT TO .086 S/R CABLE	IDENT CODE: 82316 REVISION: B	Corning Gilbert Inc.

SOURCE FILE: SK-2786	DWG. NO.: OL-H118-D32-04	ASSY. PROC.: AP18-001