DATE REVISED: 5/20/10

CATALOG NUMBER	"A" INTERFACE
A016-B83-01	FULL DETENT
A016-B84-01	LIMITED DETENT
A016-B86-01	CATCHERS MITT

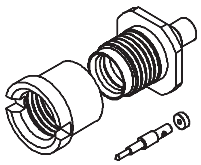

MATERIAL AND FINISH

FRONT NUT AND BULKHEAD HOUSING:	CRES 303; PASSIVATED
CENTER CONTACT AND CABLE ADAPTOR:	BeCu; GOLD PLATE 75 MICROINCHES TYPICAL OVER NICKEL PLATE 100 MICROINCHES TYPICAL
DIELECTRIC:	VIRGIN PTFE
DIELECTRIC STOP:	POLYETHERIMIDE

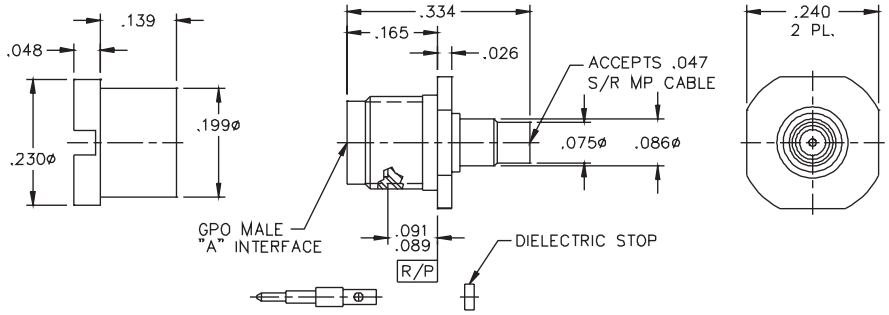

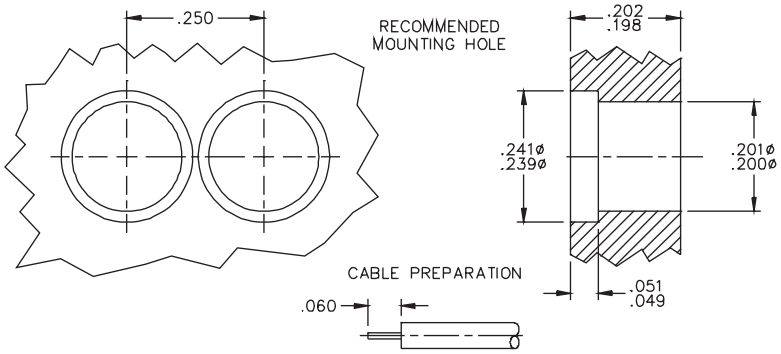

This drawing and any data contained herein is the property of Corning Gilbert Inc., and constitutes and contains proprietary and confidential information. Neither receipt nor possession of this drawing confers or transfers any right to duplicate, use or disclose any information contained herein except as expressly authorized by Corning Gilbert Inc.

GPO MALE BULKHEAD MOUNT TO .047 S/R MP CABLE (TAB DETENT)	IDENT CODE: 82316 REVISION: C	Corning Gilbert Inc.

SOURCE FILE:	MECR# 1888	DWG. NO.:	OL-A016-B8X-01	ASSY. PROC.:	AP01-063