DATE REVISED: 2/28/11

CATALOG NUMBER
A010-L16-08

MATERIAL AND FINISH

BUSHING:	CRES 303; PASSIVATED
CENTER CONTACT AND HOUSING:	BeCu; GOLD PLATE 75 MICROINCHES TYPICAL OVER NICKEL PLATE 100 MICROINCHES TYPICAL
DIELECTRICS:	VIRGIN PTFE

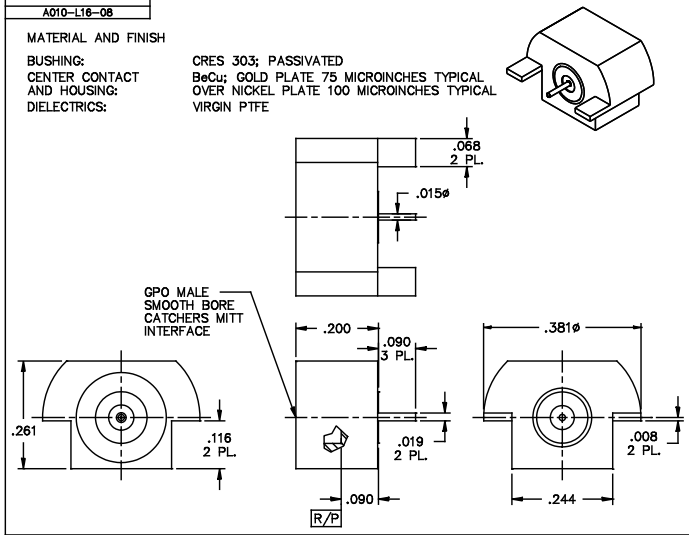

RECOMMENDED
MOUNTING FOOTPRINT

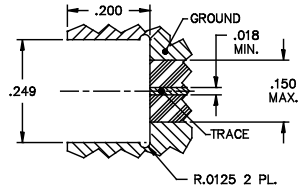

This drawing and any data contained herein is the property of Corning Gilbert Inc., and constitutes and contains proprietary and confidential information. Neither receipt nor possession of this drawing confers or transfers any right to duplicate, use or disclose any information contained herein except as expressly authorized by Corning Gilbert Inc.

GPO MALE SMOOTH BORE CATCHERS MITT EDGE MOUNT	IDENT CODE: 82316 REVISION: A	Corning Gilbert Inc.

SOURCE FILE:	SK-4065	DWG. NO.:	OL-A010-L16-08	ASSY. PROC.:	—