DATE REVISED: 12/10/09

CATALOG NUMBER	"A" INTERFACE
B016-B33-02	FULL DETENT
B016-B35-02	SMOOTH BORE

MATERIAL AND FINISH

SHROUD AND HOUSING:	CRES 303; PASSIVATED
CENTER CONTACT AND CABLE ADAPTER:	BeCu; GOLD PLATE 75 MICRINCHES TYPICAL OVER NICKEL PLATE 100 MICROINCHES TYPICAL
DIELECTRIC:	VIRGIN PTFE

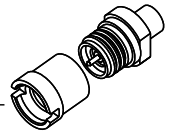

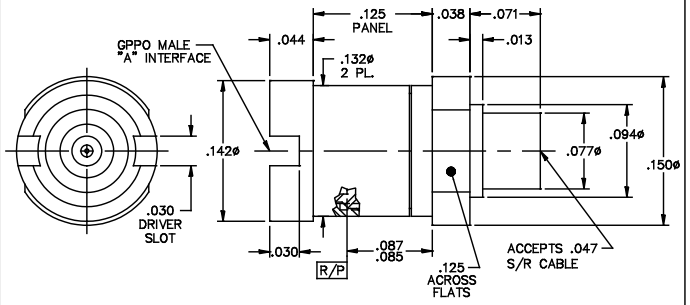

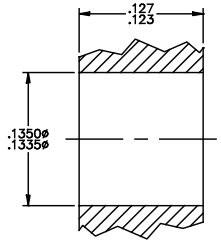

RECOMMENDED
MOUNTING HOLE

This drawing and any data contained herein is the property of Corning Gilbert Inc., and constitutes and contains proprietary and confidential information. Neither receipt nor possession of this drawing confers or transfers any right to duplicate, use or disclose any information contained herein except as expressly authorized by Corning Gilbert Inc.

GPPO MALE BULKHEAD MOUNT TO .047 S/R CABLE (TAB DETENT)	IDENT CODE: 82316 REVISION: C	Corning Gilbert Inc.

SOURCE FILE:	SK-1924	DWG. NO.:	OL-B016-B3X-02	ASSY. PROC.:	AP01-110