JYEBAO www.jyebao.com.tw

| N364L2-0000 | N Plug For Panel Receptacle 50Ω |
|---|---|

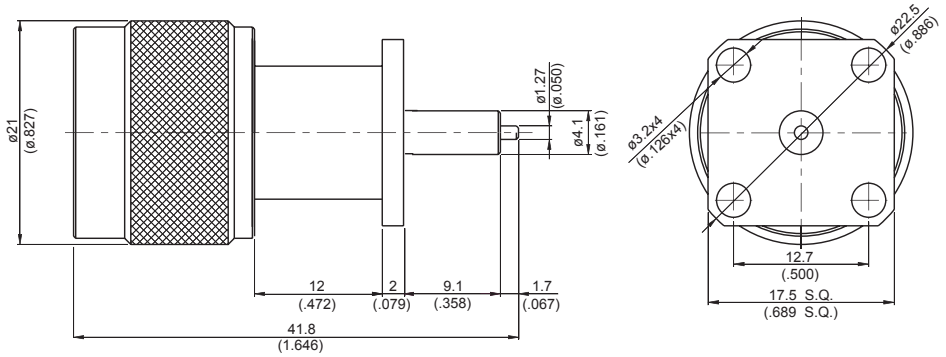


MOUNTING HOLE

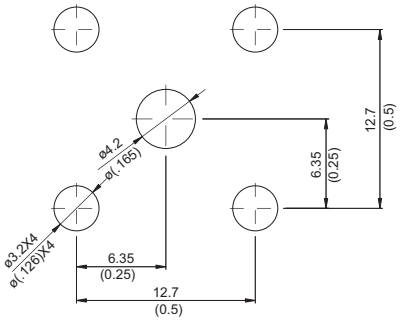


| Parts | Material | Plating (Micro-inch) |
|---|---|---|
| Insulator | Teflon | |
| Contact Pin | Brass | Gold 5 Over Nickel 50 Over Copper 50 |
| Retainer Ring | Brass | Tin-Zinc-Copper-Alloy 100 Over Copper 50 |
| Gasket | Silicon | |
| Contact Body | Brass | Tin-Zinc-Copper-Alloy 100 Over Copper 50 |
| Body | Brass | Tin-Zinc-Copper-Alloy 100 Over Copper 50 |
| Coupling Nut | Brass | Tin-Zinc-Copper-Alloy 100 Over Copper 50 |

Weight:

**This part number complies with RoHS.**

**Notice: JYEBAO reserves the right to make modifications deemed appropriate.**