1.0 PERFORMANCE
1.1 FREQUENCY RANGE: DC–11GHz
1.2 VOLTAGE RANGE: 1000V RMS (sea level)
1.3 NOMINAL IMPEDANCE: 50 OHMS
1.4 DWV: 2500V RMS @ 60Hz (sea level)
1.5 TEMPERATURE RANGE: –65°C TO +165°C
2.0 MATERIALS
2.1 DIELECTRIC: TEFLON, ASTM–D–1710
2.2 CENTER CONTACT: BRASS, ASTM–B–16
2.3 LOCKING RING: PHOSPHOR BRONZE, ASTM–B–159, ALLOY 510
2.4 ALL OTHER METAL PARTS: BRASS, ASTM–B–16
2.5 GASKETS: SILICON RUBBER, ZZ–R–765, GR. 50, RED
3.0 FINISHES
3.1 CENTER CONTACT: SEE TABLE
3.2 ALL OTHER METAL PARTS: SEE TABLE
4.0 MECHANICAL
4.1 INTERFACE IN ACCORDANCE WITH MIL–STD–348

DWG NO.	REV.
OL–204C–1	A

PLATING VARIATIONS		
PART NUMBER	BODY	CONTACT
UG–204C/U	NICKEL	SILVER

DO NOT SCALE DRAWING

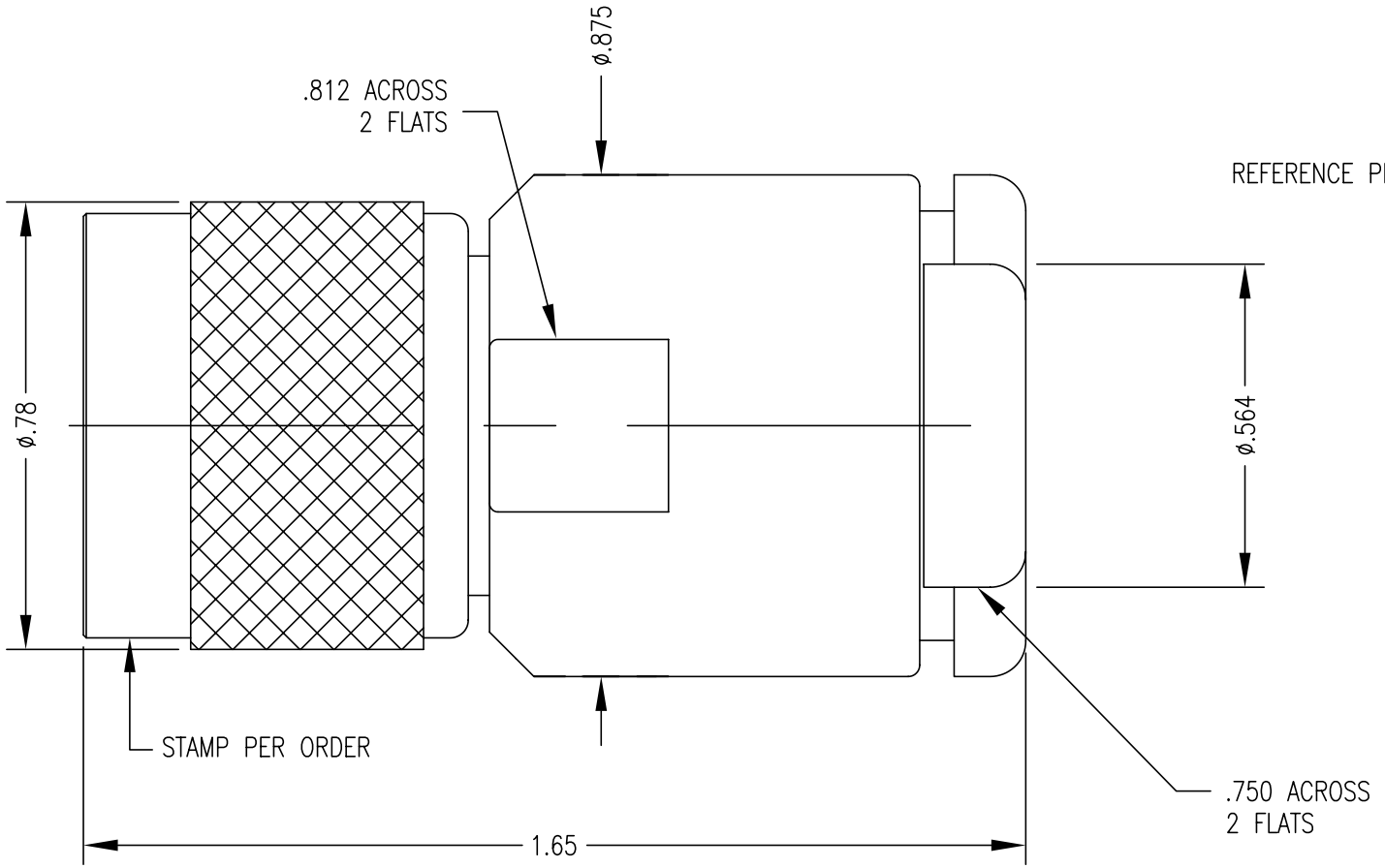

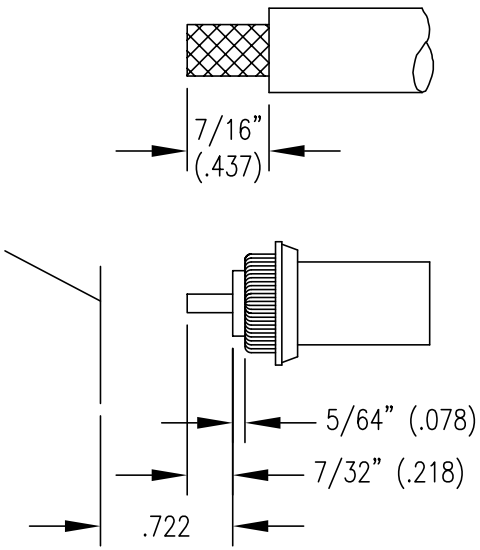

CABLE PREPARATION DETAIL
(NOT TO SCALE)

Rev.	Revisions	Disp.	Date	Dwn.	Appd.
A	ORIGINAL	NEW	01/19/04		

RECOM. STOCK SIZE	FT/M PCS		REMOVE ALL BURRS AND SHARP EDGES .005 MAX.	INTERPRET PER ANSI Y14.5M–1982

THIS DRAWING CONTAINS CONFIDENTIAL INFORMATION PROPRIETARY TO SAN–TRON INC. IT MUST NOT BE REPRODUCED OR DISCLOSED TO OTHERS OR USED IN ANY OTHER WAY, IN WHOLE OR PART EXCEPT AS AUTHORIZED IN WRITING BY SAN–TRON INCORPORATED.

UNLESS OTHERWISE SPECIFIED:
ALL DIMENSIONS ARE IN INCHES.
ALL DIMENSIONS ARE AFTER PLATING.
ALL MACHINED SURFACES 63√ MAX.
.XXX= ±.005 .XX= ±.01 FRACTIONAL = ±1/64
◎ .002 MAX. TIR. ANG.± 1/2° ⊥ AXIS .001

THIRD ANGLE PROJECTION

DWN	DT	01/16/04
CHKD	SJS	01/19/04
APPR	FSH	01/19/04

SAN-TRON, INC.
4 NEWBURYPORT TPK. IPSWICH MA USA 01938
TEL: 978 - 356 -1585 FAX: 978 - 356 -1573
WWW. santron.com E MAIL: santron@santron.com

TITLE N PLUG FOR RG–14, 14A & 217/U

MATERIAL: SEE NOTE 2.0
FINISH: SEE NOTE 3.0
CAGE CODE: 50896
SCALE 3:1
DWG NO. OL–204C–1
REV. A