DWG NO.		REV.
OL–0402–05–1		A
PART NUMBER	BODY	CONTACT
0402–05	NICKEL	SILVER

1.0 PERFORMANCE: (SEA LEVEL)
1.1 FREQUENCY RANGE: DC–11 GHz
1.2 NOMINAL IMPEDANCE: 50 OHMS
1.3 DWV: 2,500 Vrms @ 60 Hz
1.4 TEMPERATURE RANGE: –65 TO +165°C

2.0 MATERIALS: RoHS & REACH
2.1 CONTACTS: BRASS & BeCu
2.2 DIELECTRIC: PTFE
2.3 RETAINING RING: PHOSPHOR BRONZE
2.4 OTHER METAL PARTS: BRASS
2.5 GASKET: Si RUBBER

3.0 FINISHES: SEE TABLE

4.0 MECHANICAL:
4.1 INTERFACE PER MIL–STD–348

PLATING PER SAN–TRON SPEC. 7.3.1–8

DO NOT SCALE DRAWING

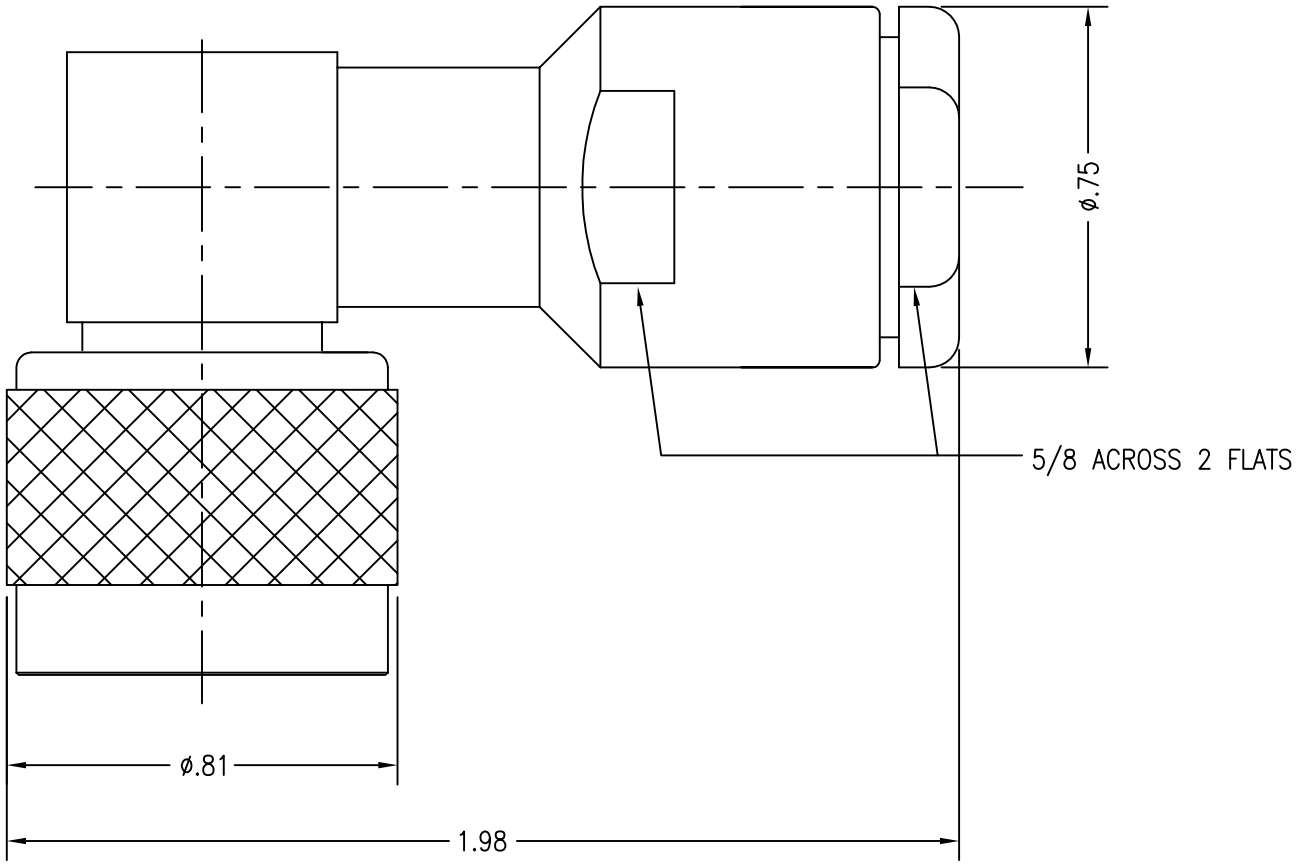

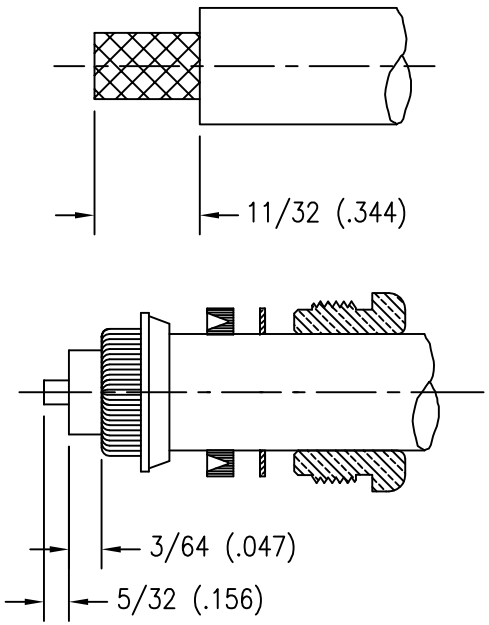

CABLE STRIP DIMENSIONS
NOT TO SCALE

Rev.	Revisions	Disp.	Date	Dwn.	Appd.
A	ORIGINAL	NEW	5/3/17		

Ref.:

REMOVE ALL BURRS AND SHARP EDGES .005 MAX.

INTERPRET PER ASME Y14.5M–1994

THIS DRAWING CONTAINS CONFIDENTIAL INFORMATION PROPRIETARY TO SAN–TRON, INC. IT MUST NOT BE REPRODUCED OR DISCLOSED TO OTHERS OR USED IN ANY OTHER WAY, IN WHOLE OR PART EXCEPT AS AUTHORIZED IN WRITING BY SAN–TRON, INC.

UNLESS OTHERWISE SPECIFIED:
ALL DIMENSIONS ARE IN INCHES.
ALL DIMENSIONS ARE AFTER PLATING.
.XXX= ±.005 ALL MACHINED SURFACES 63√ MAX.
.XX= ±.01 ANG.±1/2° FRACTIONAL= ±1/64
◎ .004 MAX. TIR. ⊥ AXIS .001

THIRD ANGLE PROJECTION

DWN	PRS	5/3/17
CHKD	FSH	/
APPR	PRS	5/3/17

SAN-TRON, INC.
4 NEWBURYPORT TPK. IPSWICH MA USA 01938
TEL: 978 - 356 -1585 FAX: 978 - 356 -1573
WWW. santron.com E MAIL: santron@santron.com

TITLE N RIGHT ANGLE PLUG FOR RG–8, 9, 11, 213 & 214/U CABLE

MATERIAL: SEE NOTES FINISH: SEE TABLE

CAGE CODE: 50896 DWG NO. OL–0402–05–1 REV. A

SCALE X:X